Diritti riservati All rights reserved

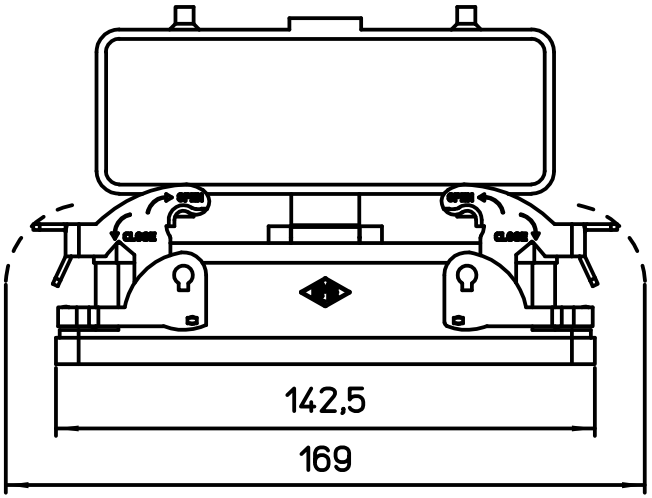

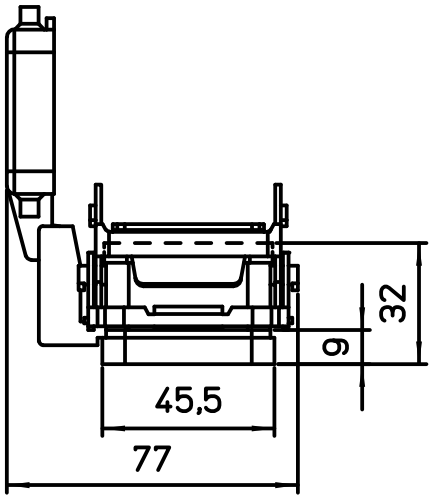

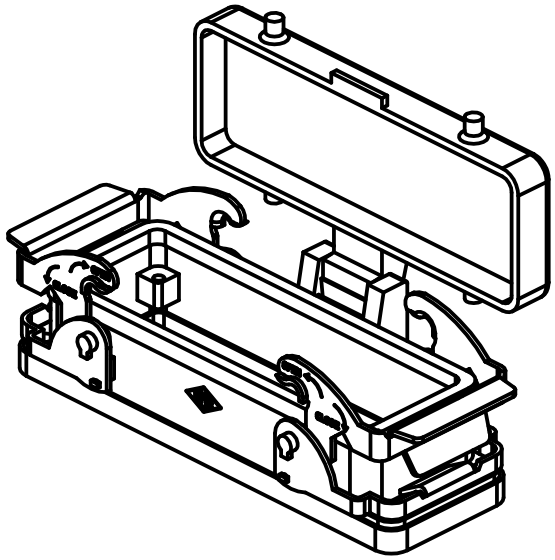

Panel cut out

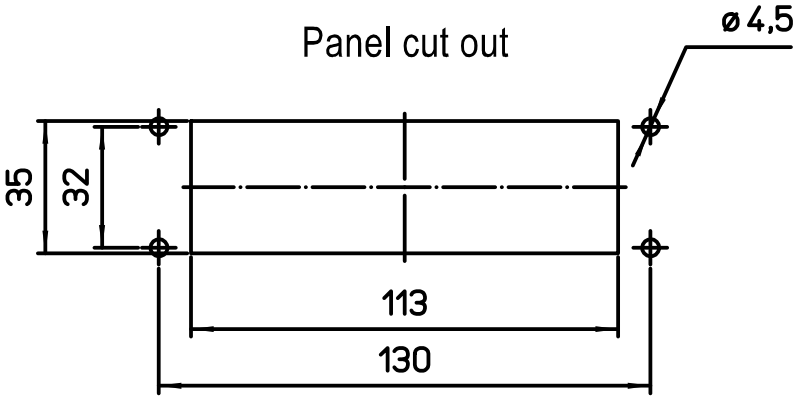

dimensions in mm	C7I 24 S	Scale
Date 02/08/18	Bulkhead housing, with cover, 2 levers.	1:2
Sign. D.Cominelli		